WUNTRONIC
Mess-, Steuer-und Regelgeräte GmbH

ONE STOP SYSTEMS

PCI Express® Expansion Link Kit

Model PEX8G2-LINK-C1
Model PEX8G2-LINK-C3

Ideal connection for small, local networks that require high-speed PCIe connectivity

- Connect PCI Express Host to Expansion over cable
- Support speeds up to 40Gbps
- Use same PCIe interface card for both sides of the connection
- Industry standard iPass cable

PCI EXPRESS®

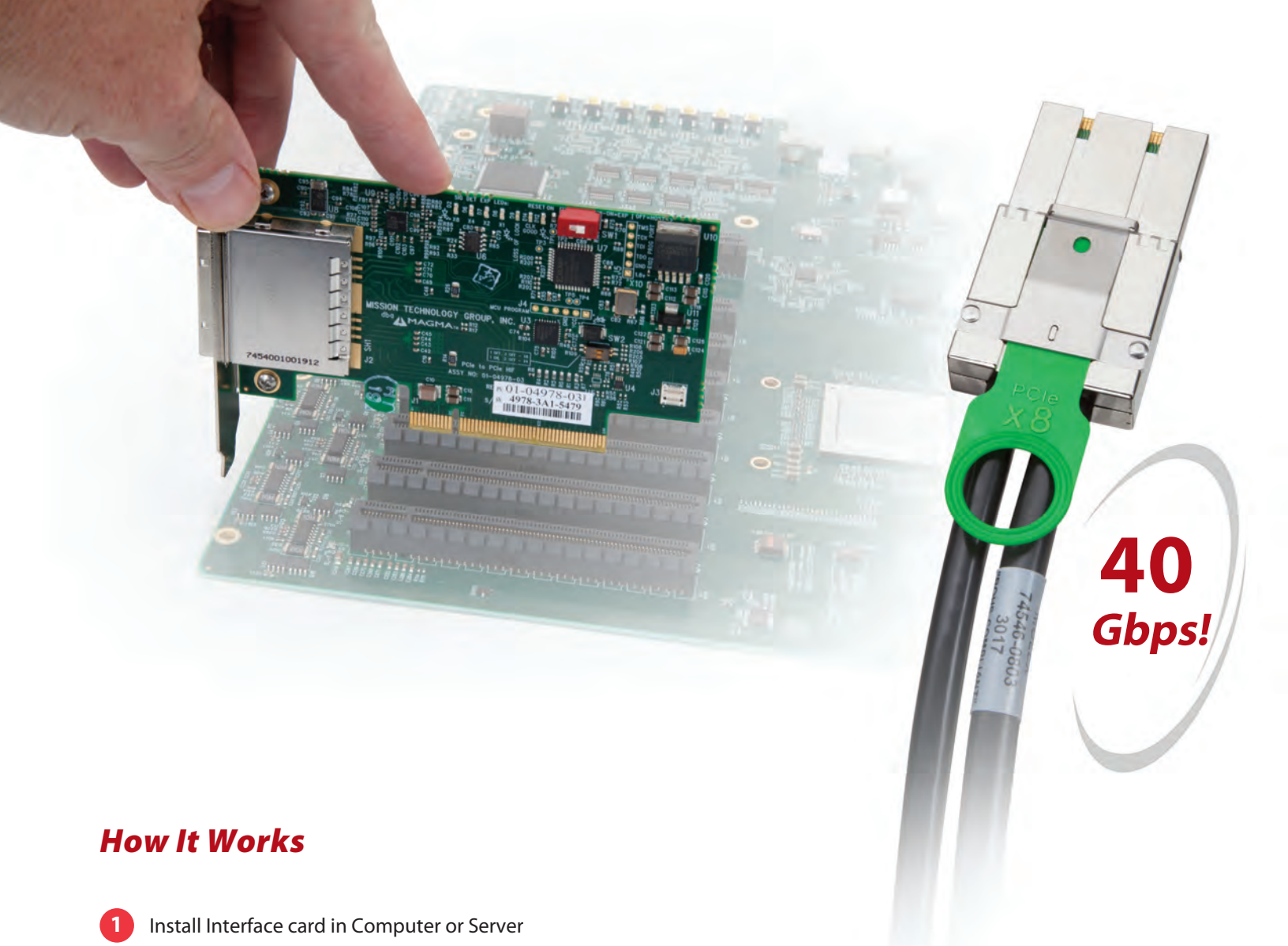

How It Works

1. Install Interface card in Computer or Server
2. Install Interface card in Expansion backplane

Use Case - Test Multiple Solid-State Drives (SSD) Simultaneously

A test fixture can be created that connects a SuperMicro server to an 8 slot PCIe expansion backplane. With the server you can connect eight test fixtures and therefore can test sixteen solid state drives simultaneously. The server runs a routine to test each card in sequence and either accepts or rejects it. The PCI Express Expansion Link Kit is used to connect the test fixture to the server at 40Gbps.

Use the PCI Express Expansion Link Kit to create a super-fast PCIe connection outside the computer

The PCIe x8 Gen 2 Expansion Link Kit is the perfect solution for creating a super-fast local PCIe connection from a host computer to a target PCI Express device. This expansion link kit allows the extension of the PCI Express signals from a host server to an external expansion backplane or chassis. The interface card installs into any x8 or x16 PCIe slot in the host computer motherboard and a second interface card can be inserted into any upstream PCIe slot. A high-speed iPass cable allows data transfers to and from the host computer at 40Gbps.

Onboard Visual Diagnostic Features

Multiple LEDs and dip switches make debugging and troubleshooting easy. Visible LEDs show the PCIe link width that each PCIe interface card is operating. Other LEDs for "Loss of Lock," "Reset ON" and "Clock Good" are useful visual indicators for troubleshooting and verifying the connection without expensive software diagnostic tools.

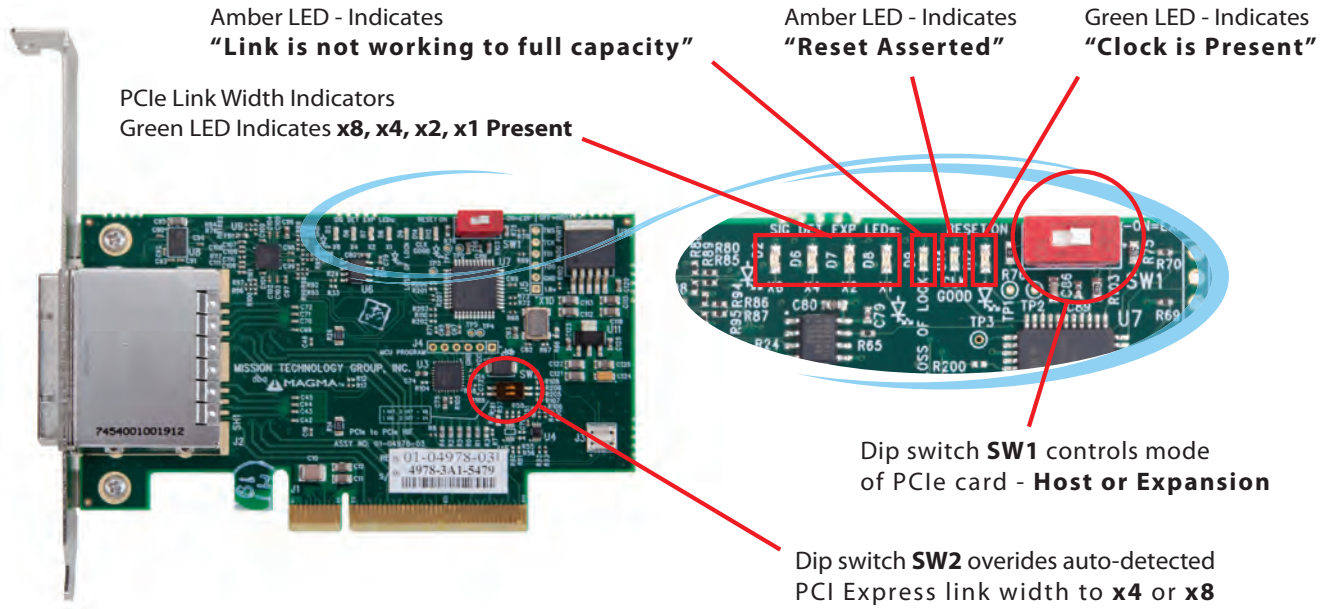

Features:

- High-speed x8 PCI Express connection
- Low profile bracket provides for easy installation in low profile computers
- Easily visible LEDs indicate correct installation and PCIe link width
- Low power consumption - less than 4 Watts
- LEDs show status of connection for quick debug- reset indicator, clock indicator, link width indicator
- Supports Spread Spectrum Clocking, LOS (Loss of Signal), LOL (Loss of Lock Indicator)
- Low Latency and Low Jitter

Benefits:

- Transparent extension of PCI Express signals outside the computer
- No software required - connection is automatically recognized and configured by system BIOS
- Attach large power hungry PCI Express cards to computer with limited card space
- Low latency PCIe connection between host and expansion without using bridges or switches
- Same PCIe card used for both the host and expansion device
- Link kit can be used with any PCIe compliant expansion chassis
- Automated x1, x4 and x8 link negotiation for PCI Express Gen1 and Gen2
- Ability to override automatic PCIe link training through dip-switch settings

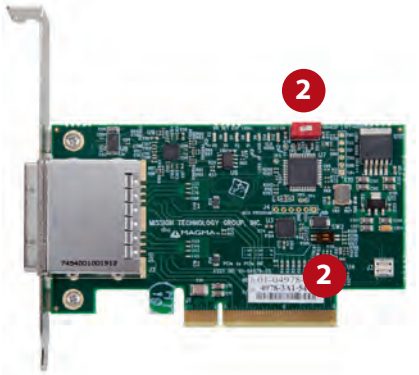

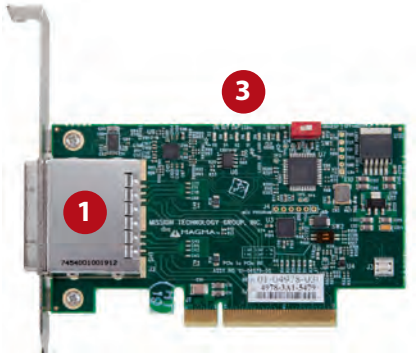

PCI Express Gen2 Link

1. x8 iPass connector
2. Jumpers for configuration
3. Status LEDs
4. x8 iPass cable

Specifications:

Technology
PCI Express Specification Rev 2.1

PCIe Link Cards
Form Factor: x8 PCIe, low-profile, half-length
LED Indicators: PCIe link width, reset, clock

Interconnect Bandwidth
40Gbps (PCI Express Gen2)

Cable
1-meter or 3-meter lengths

Physical Characteristics

Length	139.7mm (5.5 inches)
Width	12.7mm (0.5 inches)
Height	69.9mm (2.75 inches)

Hardware Requirements
PCIe x8, x16 Slot

Power Requirements
1.2A @ +3.3V maximum
3.96 Watts

Latency
Gen 1: 1200 ps
Gen 2: 600 ps

Re-timers
Gen 1: 2.5 Gbps, 4 lane equalization, reduced total jitter
Gen 2: 5.0 Gbps, 4 lane Equalization, de-emphasis and reduced total jitter to further improve the channel

Environmental
Operating Temperature -20° to 75° C
Storage Temperature -40° to 100° C
Operating Humidity: 10% to 90% non-condensing

MTBF
900,000+ Hours

Supported Operating Systems
Windows
MacOS
Linux
Solaris

Warranty
1 year return to factory

Regulatory Compliance
FCC Class B Verified
RoHS Compliant
CE

Please contact us under:

Heppstrasse 30, D-80995 Munich, Germany.

Phone: +49 (89) 313 30 07
Fax: +49 (89) 314 67 06
E-Mail: wuntronic@wuntronic.de
Internet: www.wuntronic.de